Section 8

DISPLAY UNITS

Web. acrylicdesign.ie
Email. reception@acrylicdesign.ie

© Acrylic Design 2004-2020

Supervised Sales Units

ACRYLIC DESIGN
& Fabrication Company Limited.
Unit 5a Dunboyne Industrial Estate,
Dunboyne, County Meath.
telephone: 01-802 6480 fax: 01-802 6481
email: sales@acrylicdesign.ie
www.acrylicdesign.ie

Acrylic Display Units

Display cabinets and units are manufactured in various sizes and thickness of material depending on their use, with locks fitted as required. Ideal for Ribbons, Bows, Tags, Jewellery, Glassware, Perfumes, Shoe and Watch displays.

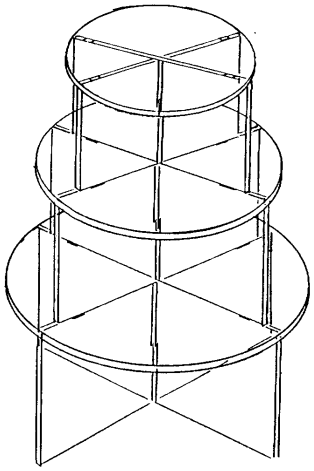

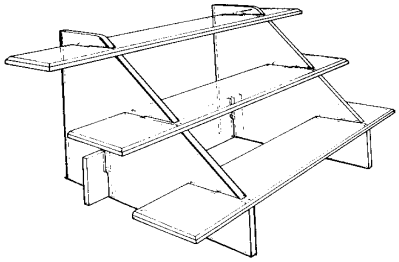

Knock down stair display

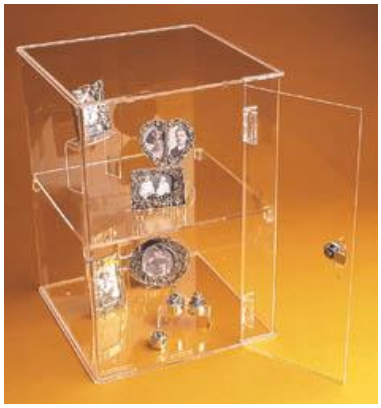

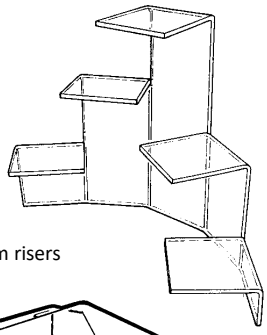

Multi tier platform risers

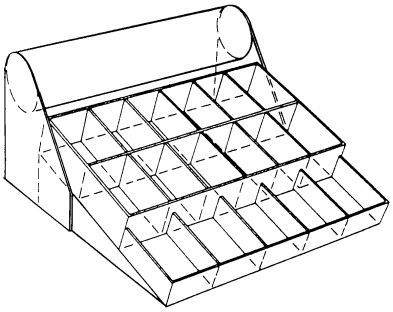

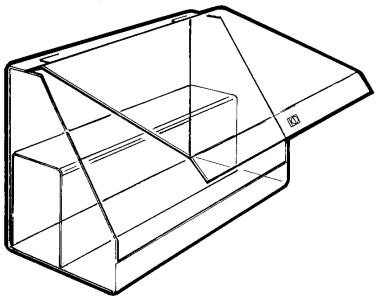

Display tubes to display various items. Made to any height

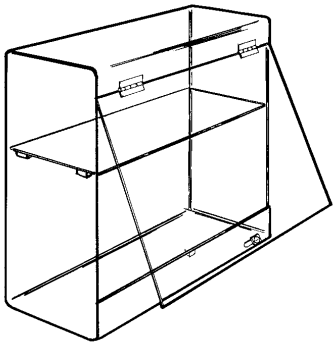

ACRYLIC DESIGN
& Fabrication Company Limited.
Unit 5a Dunboyne Industrial Estate,
Dunboyne, County Meath.
telephone: 01-802 6480 fax: 01-802 6481
email: sales@acrylicdesign.ie
www.acrylicdesign.ie

Acrylic Display Units

Display cabinets and units are manufactured in various sizes and thickness of material depending on their use, with locks fitted as required. Ideal for Ribbons, Bows, Tags, Jewellery, Glassware, Perfumes, Shoe and Watch displays.

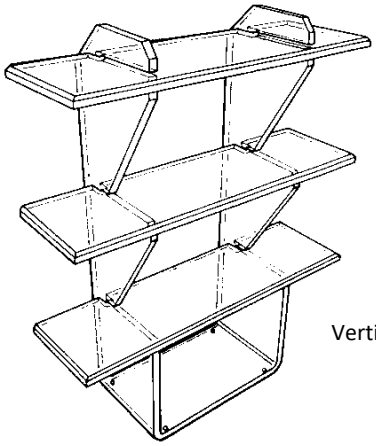

Vertical shelf stand

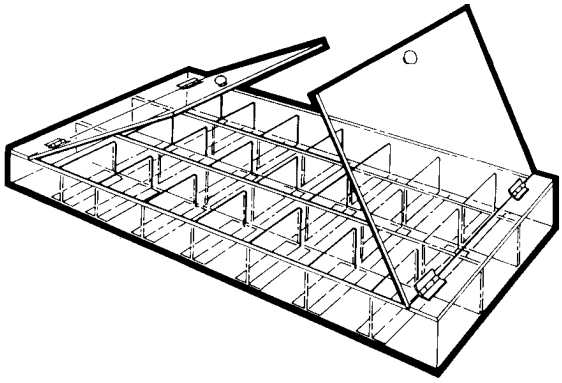

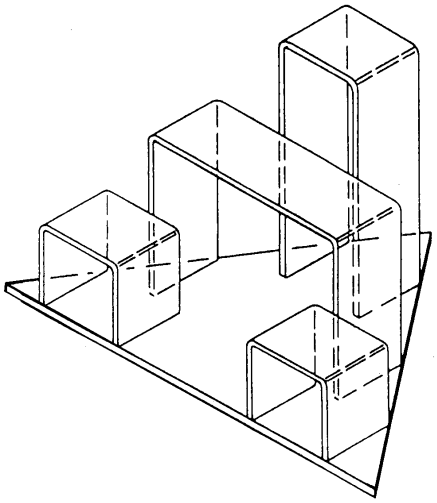

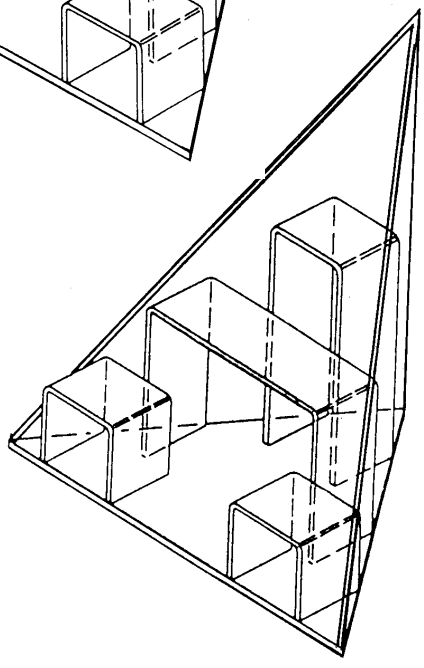

ACRYLIC DESIGN
& Fabrication Company Limited.
Unit 5a Dunboyne Industrial Estate,
Dunboyne, County Meath.
telephone: 01-802 6480 fax: 01-802 6481
email: sales@acrylicdesign.ie
www.acrylicdesign.ie

Camera Display Units

ACRYLIC DESIGN
& Fabrication Company Limited.
Unit 5a Dunboyne Industrial Estate,
Dunboyne, County Meath.
telephone: 01-802 6480 fax: 01-802 6481
email: sales@acrylicdesign.ie
www.acrylicdesign.ie

Laptop Display Units

ACRYLIC DESIGN
& Fabrication Company Limited.
Unit 5a Dunboyne Industrial Estate,
Dunboyne, County Meath.
telephone: 01-802 6480 fax: 01-802 6481
email: sales@acrylicdesign.ie
www.acrylicdesign.ie

Shoe Accessories

All shoe accessories are available in clear, white or coloured acrylic and these unit are made to order.

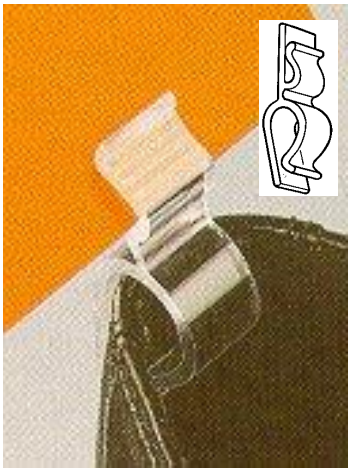

SD22
Price ticket holder
Unit size (mm) 38H 10W

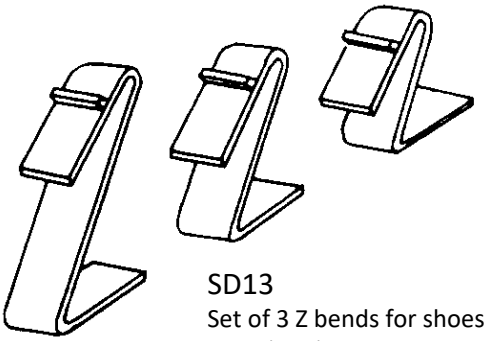

SD13
Set of 3 Z bends for shoes
Sizes (mm) 125H 75W
165H 75W
200H 75W

SD12
Boot display for slat wall
Size (mm) 460H 100W 230D
305H 100W 230D

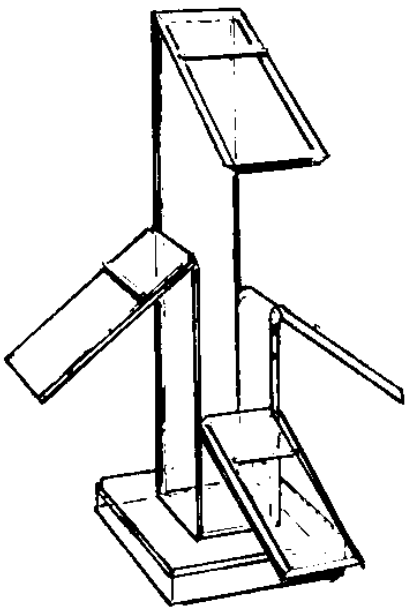

SD21
4 sided shoe tower
Size (mm) 510H

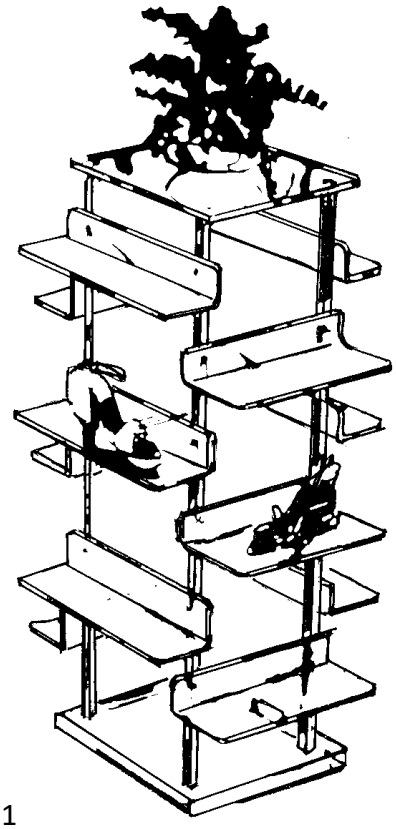

SD11
12 tiered counter top shoe display
4 sided, shelves size (mm) 100x255
Unit size (mm) 690H 450W 450D

ACRYLIC DESIGN
& Fabrication Company Limited.
Unit 5a Dunboyne Industrial Estate,
Dunboyne, County Meath.
telephone: 01-802 6480 fax: 01-802 6481
email: sales@acrylicdesign.ie
www.acrylicdesign.ie

Shoe Towers

Shoe towers are made to order in white foamex.

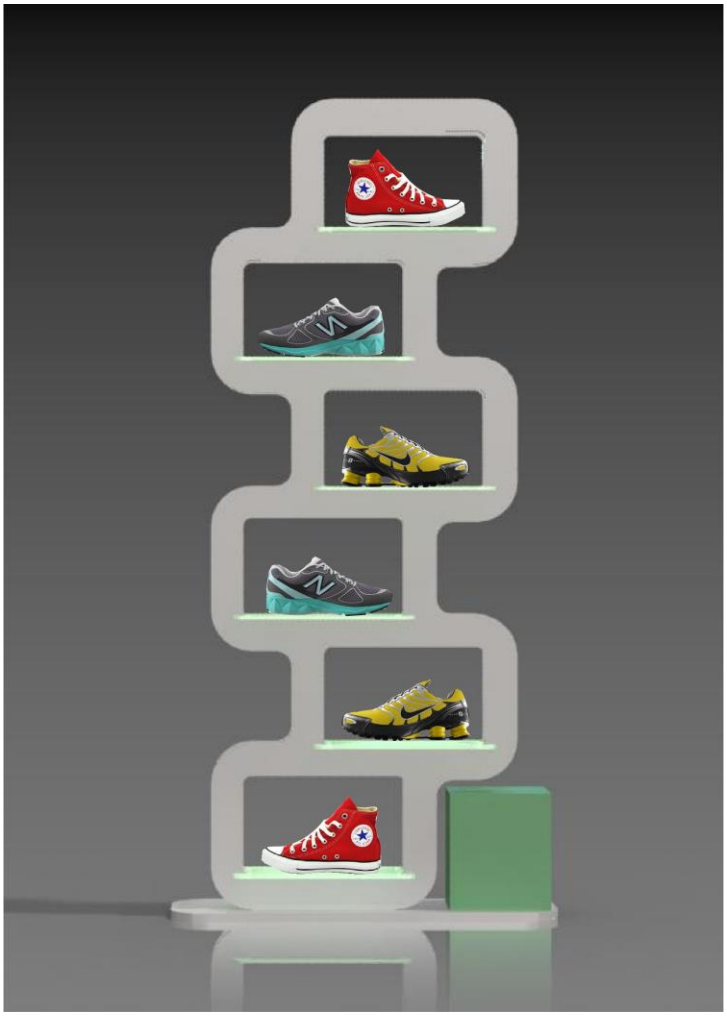

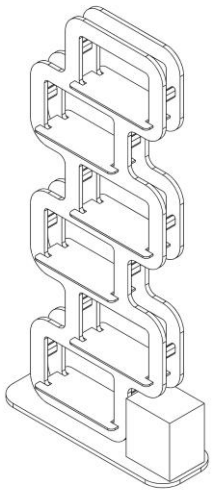

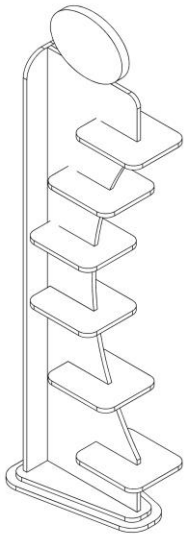

ACRYLIC DESIGN
& Fabrication Company Limited.
Unit 5a Dunboyne Industrial Estate,
Dunboyne, County Meath.
telephone: 01-802 6480 fax: 01-802 6481
email: sales@acrylicdesign.ie
www.acrylicdesign.ie

Shoe Accessories

All shoe accessories are available in clear, white or coloured acrylic and these unit are made to order.

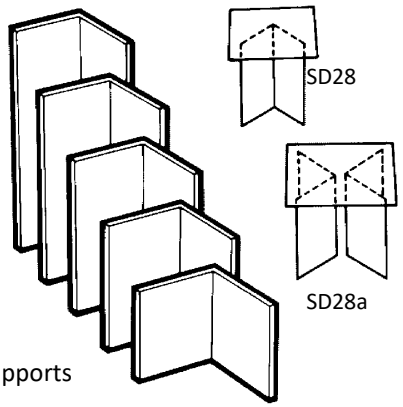

SD28
Acrylic shelf supports in 3mm clear.
Set of 5 sizes(mm),
100H 100W 100D
150H 100W 100D
200H 100W 100D
250H 100W 100D
300H 100W 100D
With 5 180x180mm shelves.
SD28a double of the above

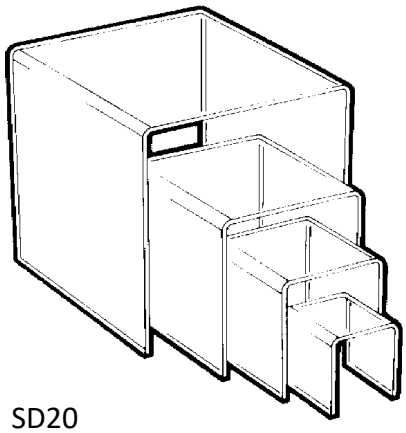

SD20
Set of 4 display bridges made in 3, 4,or 5mm clear or coloured acrylic
Sizes (mm) 100H 100W 100D
150H 150W 150D
200H 200W 200D
300H 200W 300D

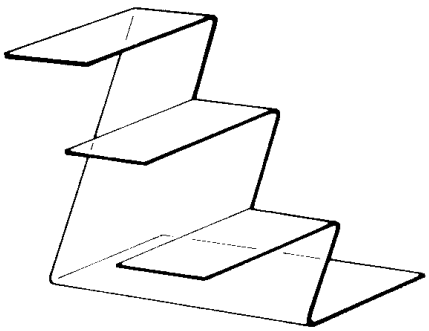

SD14
Z steps 3 tier

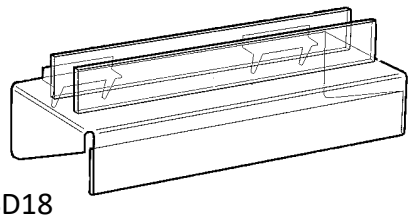

SD18
Roller blade display stand
Unit size (mm) 50H 250W 100D

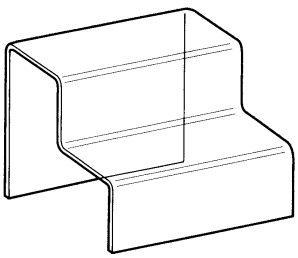

SD17
Two step unit
Unit size (mm) 100H 175W 130D
150H 220W 195D

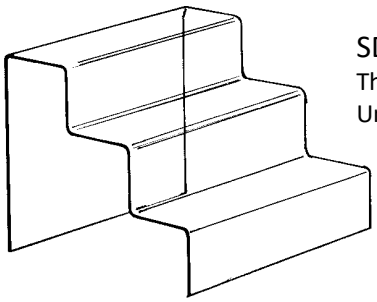

SD16
Three step unit
Unit size (mm) 150H 175W 190D
230H 220W 285D

SD23 Heel clip display

ACRYLIC DESIGN
& Fabrication Company Limited.
Unit 5a Dunboyne Industrial Estate,
Dunboyne, County Meath.
telephone: 01-802 6480 fax: 01-802 6481
email: sales@acrylicdesign.ie
www.acrylicdesign.ie

Shoe Accessories

All shoe accessories are available in clear, white or coloured acrylic and these unit are made to order.

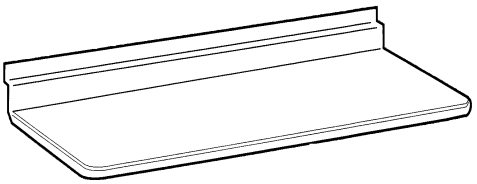

SD27
Injection moulded single tier
Unit size (mm) 255W 100D

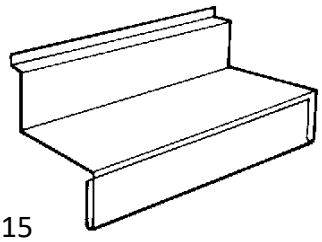

SD15
Right angle shelf with
ticket facility.
Unit size(mm) 50H 150W 75D
50H 250W 75D
50H 300W 150D

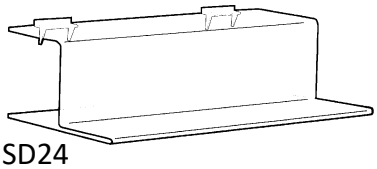

SD24
2 tier slat wall shoe display
Unit size(mm) 100H 230W 240D

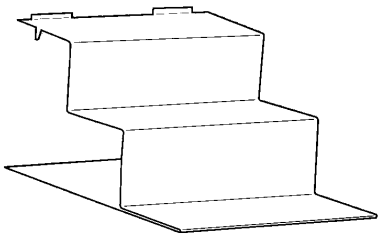

SD25
3 tier slat wall shoe display
Unit size(mm) 230H 230W 360D

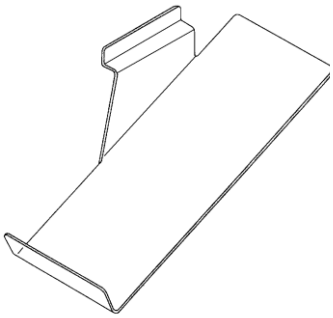

SD19
Sloping shoe display
Right or left state when ordering
Unit size (mm) 150H 75W
275H 100W

SD26
Oval slat wall shoe shelf injection
moulded frosted finish, with
clear ticket facility.
Unit size (mm) 250W 120D

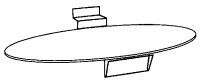

ACRYLIC DESIGN
& Fabrication Company Limited.
Unit 5a Dunboyne Industrial Estate,
Dunboyne, County Meath.
telephone: 01-802 6480 fax: 01-802 6481
email: sales@acrylicdesign.ie
www.acrylicdesign.ie

Spectacle Displays

We can design a whole range of spectacle accessories for counter top, Slat wall or our mobile display cable system. These units can be made in clear or coloured acrylic.

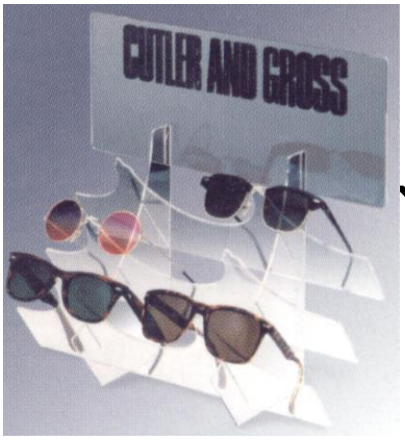

SG3
Flat Pack Eyewear Display
Displays 6 pairs of glasses,
Mirror header.
Unit size(mm) 360H 360w 190D

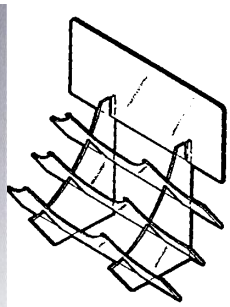

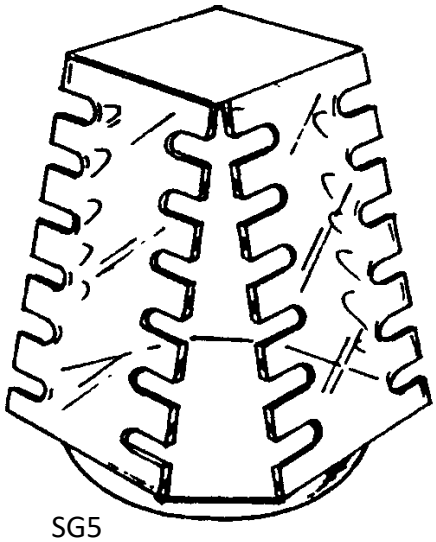

SG5
Revolving 24 Eyewear Display
Size (mm) 460H approx

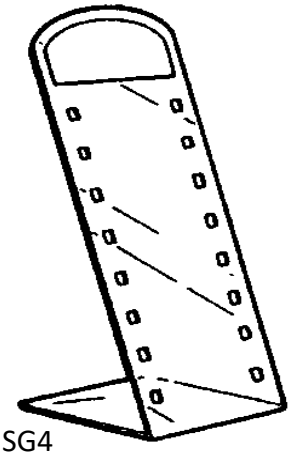

SG4
8 Piece Eyewear Display
with acrylic mirror .

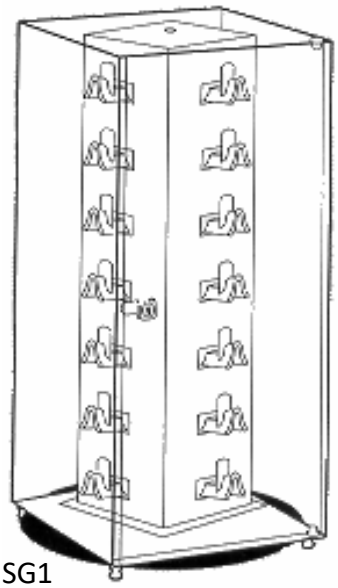

SG1
Revolving 28 Piece Eyewear Display
Unit size (mm) 750H 260W 260D

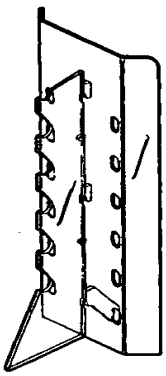

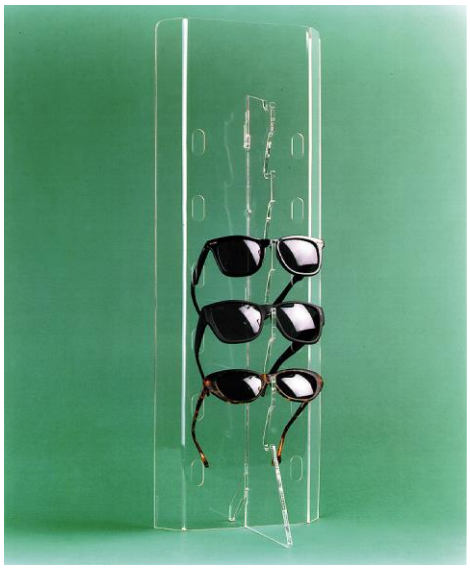

SG2
Flat pack Eye Glass Stand.
Displays 6 pairs of glasses.
Unit size (mm) 580H 210W 190D

ACRYLIC DESIGN
& Fabrication Company Limited.
Unit 5a Dunboyne Industrial Estate,
Dunboyne, County Meath.
telephone: 01-802 6480 fax: 01-802 6481
email: sales@acrylicdesign.ie
www.acrylicdesign.ie

Spectacle Displays

We can design a whole range of spectacle accessories for counter top, Slat wall or our mobile display cable system. These units can be made in clear or coloured acrylic.

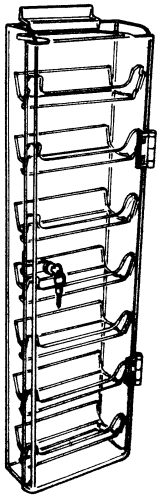

SG6
Locking Eyewear Case
This unit has 7 pop in shelve,and locking door.
Unit Size (mm) 585H 160W 75D

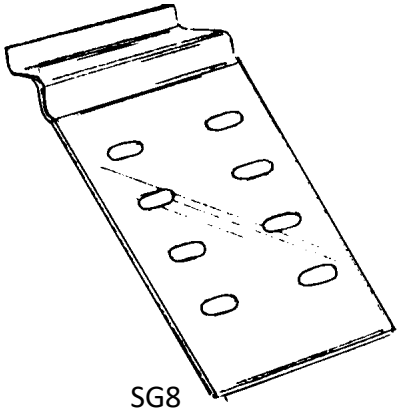

SG8
Slat wall holder

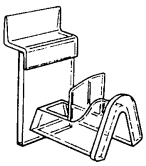

SG11
Single Eyewear Display

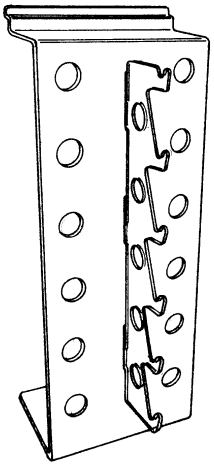

SG9
Multi Frame Display
Unit size (mm) 490H 190W 160D

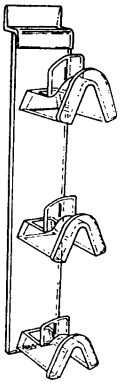

SG13
Triple Eyewear Display

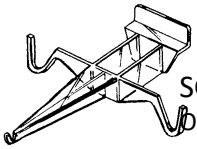

SG14
Open Frame Eyewear Display

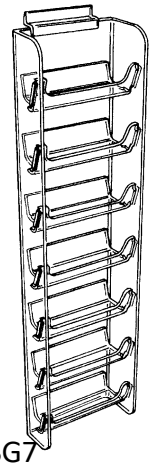

SG7
Open Eyewear Case
This unit has 7 pop in shelves.
Unit Size (mm) 585H 160W 75D

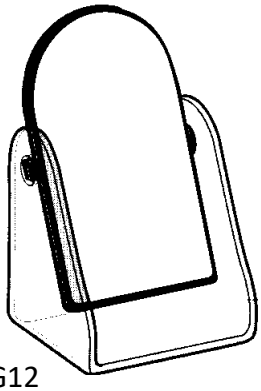

SG12
Swivel mirror unit
Unit size (mm) 300H

SG10
Revolving Eyewear Display

ACRYLIC DESIGN
& Fabrication Company Limited.
Unit 5a Dunboyne Industrial Estate,
Dunboyne, County Meath.
telephone: 01-802 6480 fax: 01-802 6481
email: sales@acrylicdesign.ie
www.acrylicdesign.ie

Fashion Accessories

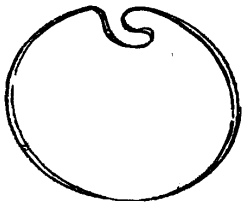

Brief hanger in acrylic

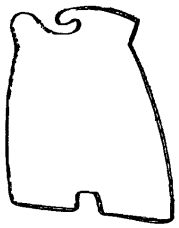

French knicker hanger

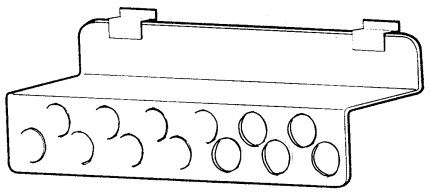

Scarf display for slat wall

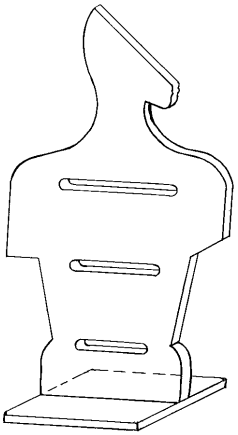

Acrylic torso

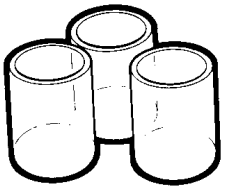

Acrylic tubes for accessories

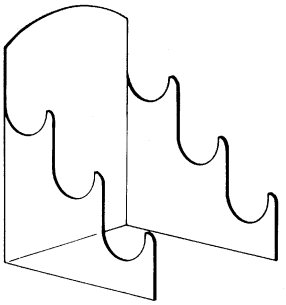

3 tier bag stand

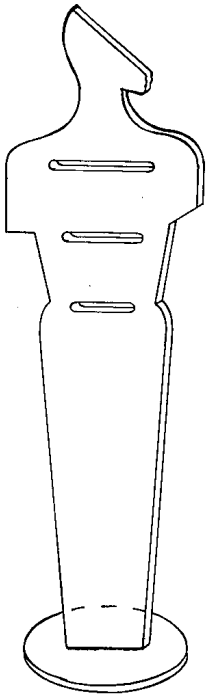

Acrylic fashion figure in 25mm clear

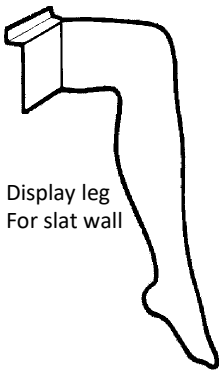

Display leg
For slat wall

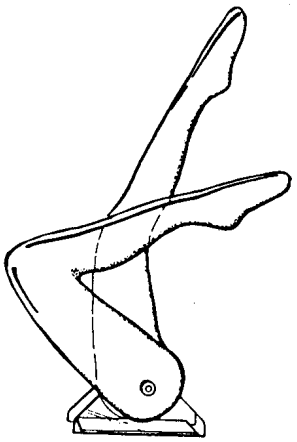

Tight display stand

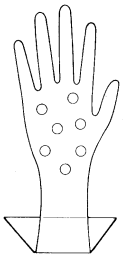

Glove display

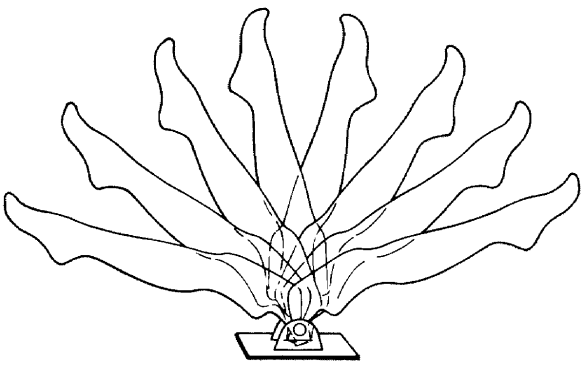

Multiple tight display stand with 8 legs

ACRYLIC DESIGN
& Fabrication Company Limited.
Unit 5a Dunboyne Industrial Estate,
Dunboyne, County Meath.
telephone: 01-802 6480 fax: 01-802 6481
email: sales@acrylicdesign.ie
www.acrylicdesign.ie

Jewellery Accessories

All designed and manufactured to suit your needs, in clear or coloured acrylic.

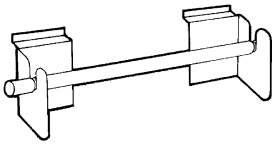

Display rail for slat wall

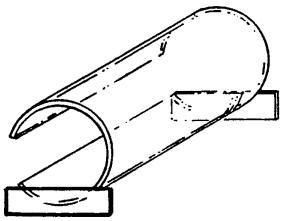

Hair band display

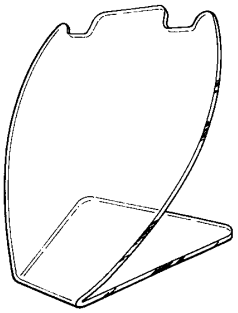

Chain display stand

Bangle display unit

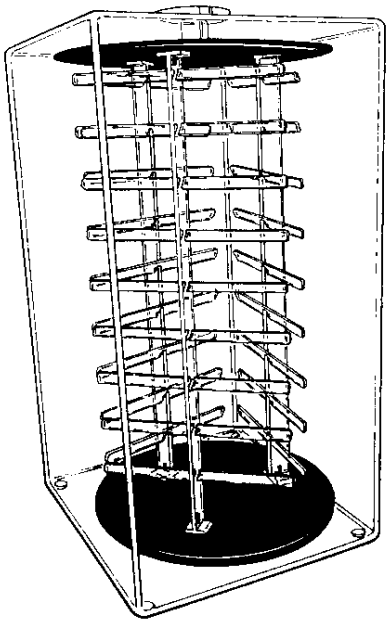

Counter top revolving earring display

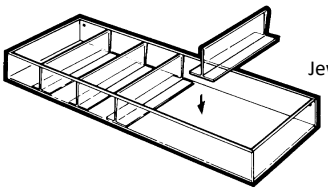

Jewellery tray and dividers

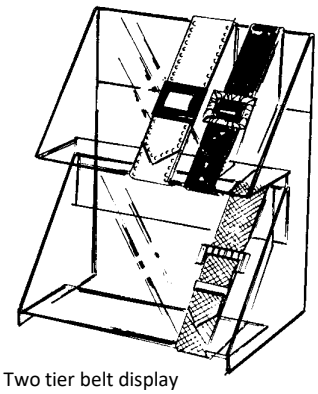

Two tier belt display
Made in 5mm clear acrylic
Unit size (mm) 510H 410W 305D

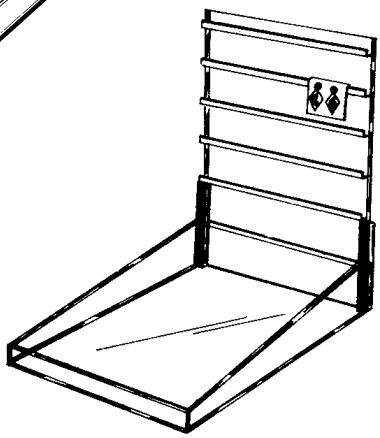

Earring display tray

ACRYLIC DESIGN
& Fabrication Company Limited.
Unit 5a Dunboyne Industrial Estate,
Dunboyne, County Meath.
telephone: 01-802 6480 fax: 01-802 6481
email: sales@acrylicdesign.ie
www.acrylicdesign.ie

Jewellery Accessories

All designed and manufactured to suit your needs, in clear or coloured acrylic.

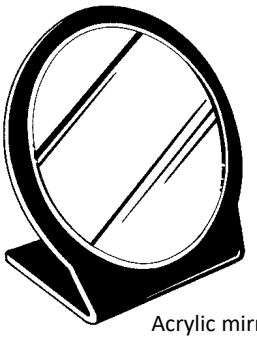

Acrylic mirror

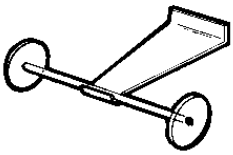

Bangle display unit
for slat wall

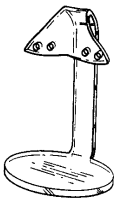

Drop earring stand

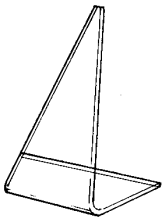

Brooch stand

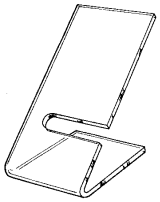

Watch stand

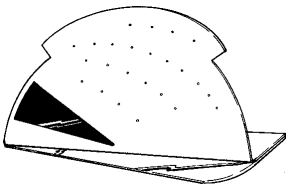

Multi earring display

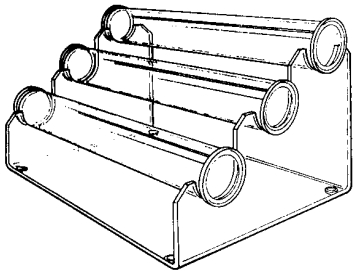

Triple bracelet bars

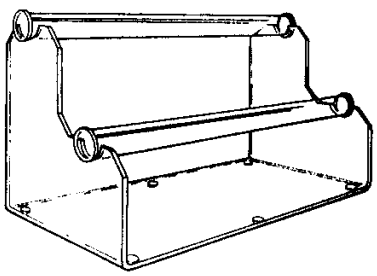

Double bracelet bars

ACRYLIC DESIGN
& Fabrication Company Limited.
Unit 5a Dunboyne Industrial Estate,
Dunboyne, County Meath.
telephone: 01-802 6480 fax: 01-802 6481
email: sales@acrylicdesign.ie
www.acrylicdesign.ie

Pen Stands

All designed and manufactured to suit your needs, in clear or coloured acrylic.

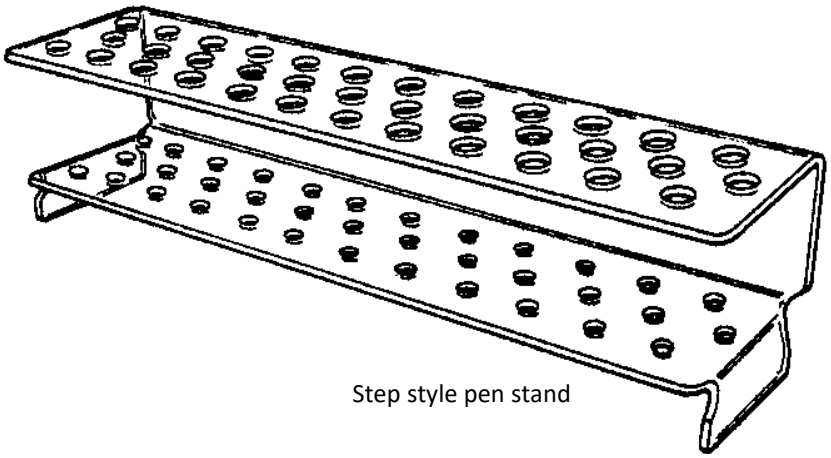

Step style pen stand

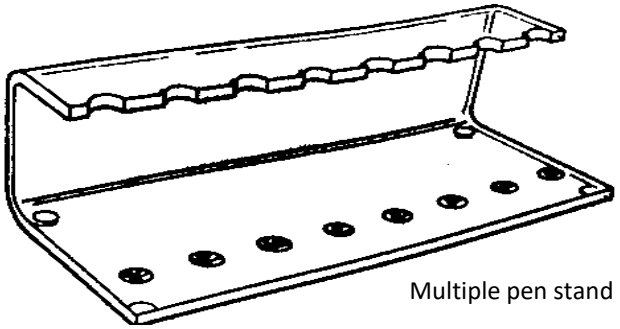

Multiple pen stand

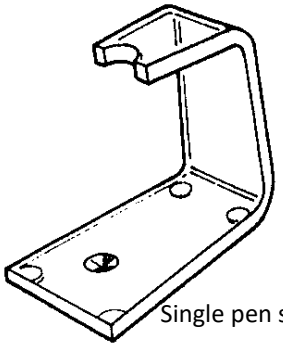

Single pen stand

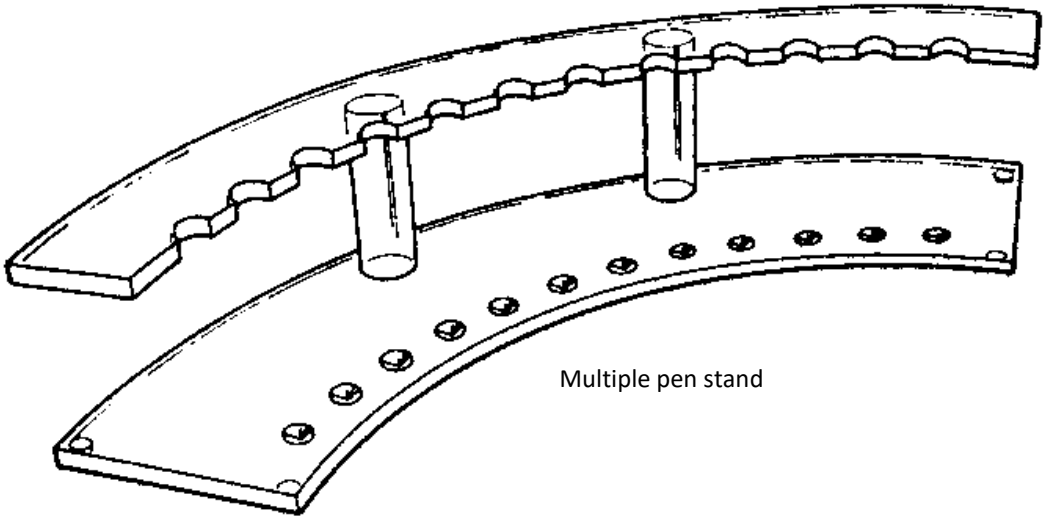

Multiple pen stand

ACRYLIC DESIGN
& Fabrication Company Limited.
Unit 5a Dunboyne Industrial Estate,
Dunboyne, County Meath.
telephone: 01-802 6480 fax: 01-802 6481
email: sales@acrylicdesign.ie
www.acrylicdesign.ie

Nail Polish Displays

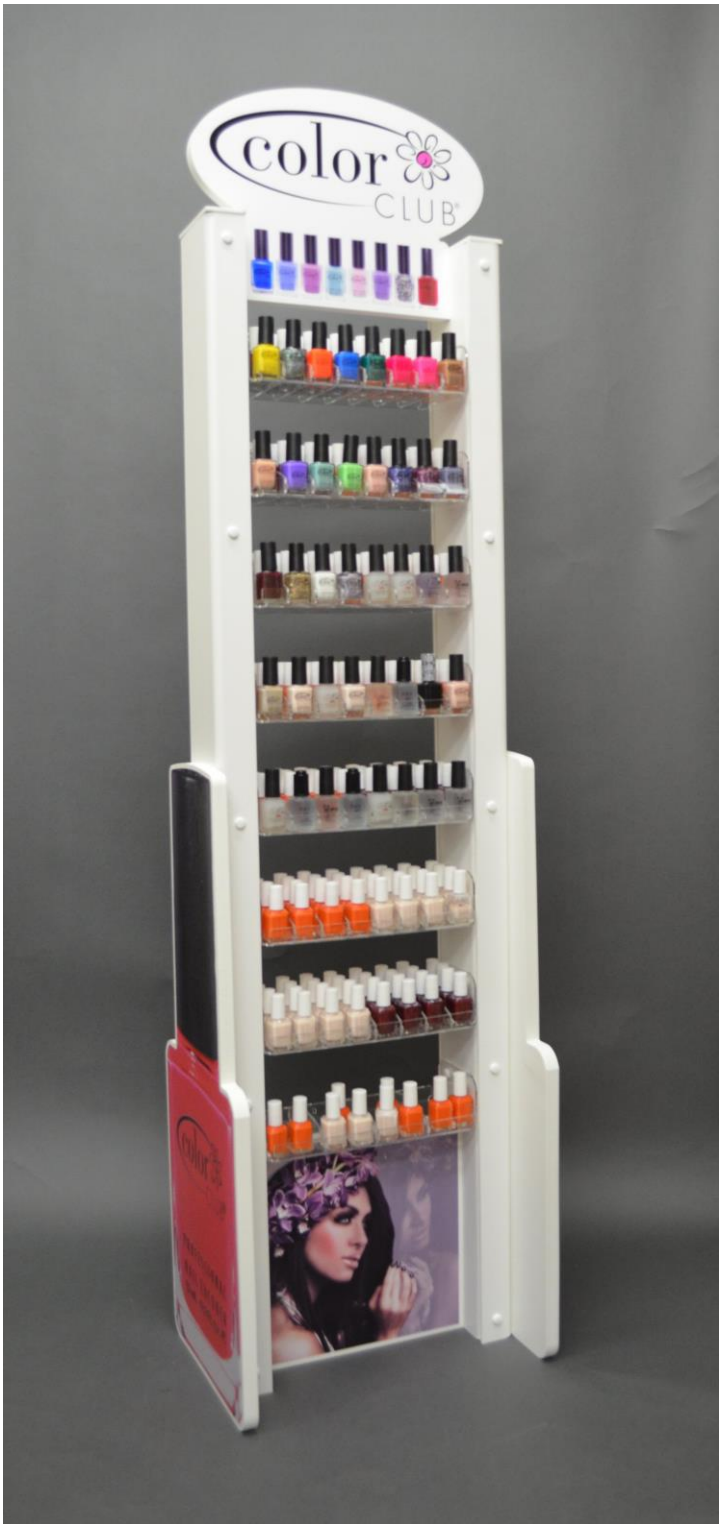

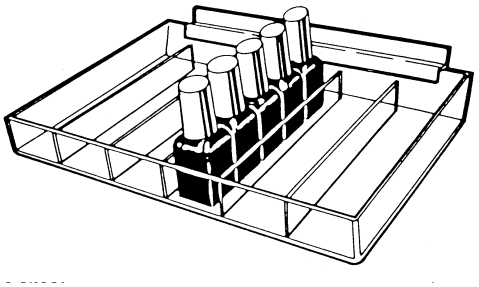

Nail polish dispenser

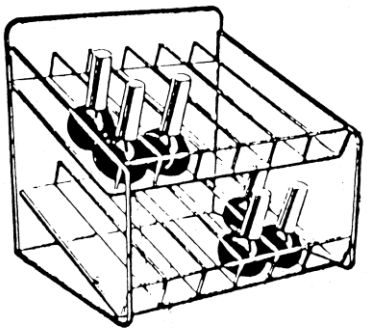

Nail polish dispenser

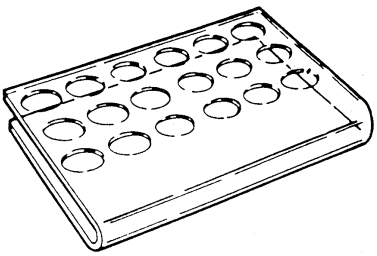

General holder

ACRYLIC DESIGN
& Fabrication Company Limited.
Unit 5a Dunboyne Industrial Estate,
Dunboyne, County Meath.
telephone: 01-802 6480 fax: 01-802 6481
email: sales@acrylicdesign.ie
www.acrylicdesign.ie

Cosmetic Displays

ACRYLIC DESIGN
& Fabrication Company Limited.
Unit 5a Dunboyne Industrial Estate,
Dunboyne, County Meath.
telephone: 01-802 6480 fax: 01-802 6481
email: sales@acrylicdesign.ie
www.acrylicdesign.ie

Merchandising Units

Placed at the checkout or within other shop displays, the merchandising of small impulse purchases. Units can be sited independently, or collective to create enticing merchandising areas.

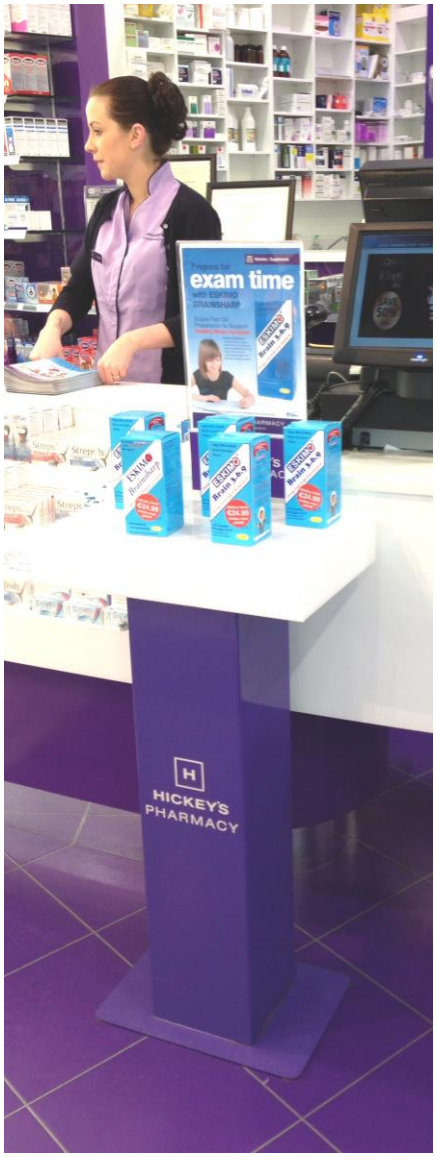

ACRYLIC DESIGN
& Fabrication Company Limited.
Unit 5a Dunboyne Industrial Estate,
Dunboyne, County Meath.
telephone: 01-802 6480 fax: 01-802 6481
email: sales@acrylicdesign.ie
www.acrylicdesign.ie

Cosmetic Displays

These displays are made to order and can be branded with your company logo.

ACRYLIC DESIGN
& Fabrication Company Limited.
Unit 5a Dunboyne Industrial Estate,
Dunboyne, County Meath.
telephone: 01-802 6480 fax: 01-802 6481
email: sales@acrylicdesign.ie
www.acrylicdesign.ie

Cosmetics Displays

These displays are made to order and can be branded with your company logo.

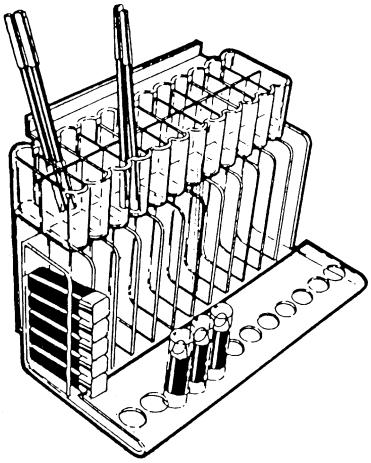

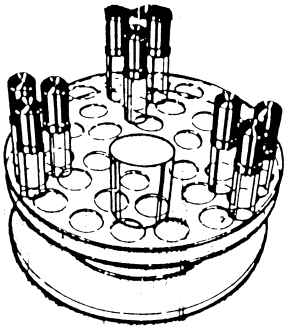

Revolving counter display

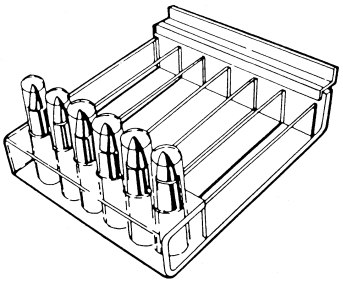

Lipstick tray with testers

ACRYLIC DESIGN
& Fabrication Company Limited.
Unit 5a Dunboyne Industrial Estate,
Dunboyne, County Meath.
telephone: 01-802 6480 fax: 01-802 6481
email: sales@acrylicdesign.ie
www.acrylicdesign.ie

Cosmetics Displays

These displays are made to order and can be branded with your company logo.

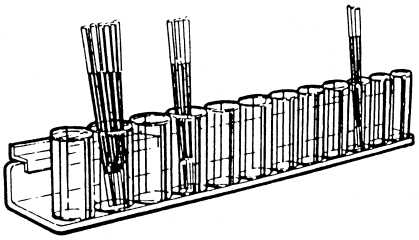

Mascara tube / Pencil holder

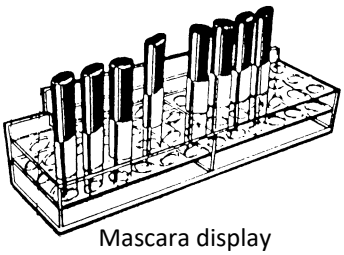

Mascara display

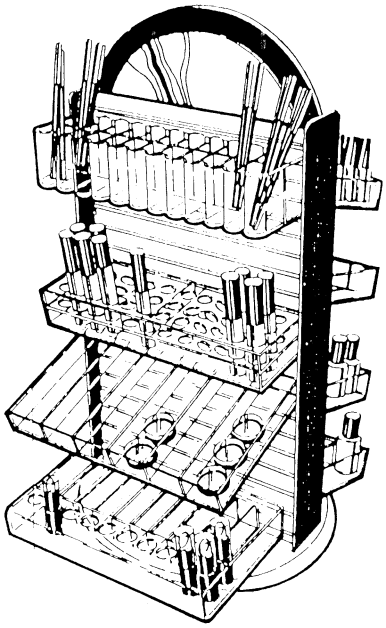

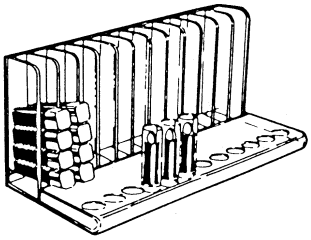

Counter display with testers

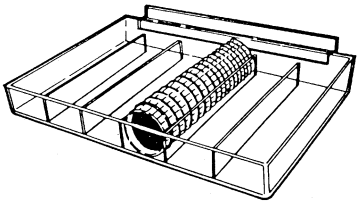

Eye shadow tray

Display stand for Rimmel Cosmetics

ACRYLIC DESIGN
& Fabrication Company Limited.
Unit 5a Dunboyne Industrial Estate,
Dunboyne, County Meath.
telephone: 01-802 6480 fax: 01-802 6481
email: sales@acrylicdesign.ie
www.acrylicdesign.ie

Tobacco & Licence Trade

We can design and manufacture, Ice buckets, Matchbox dispensers, Napkin holders, Till protectors, Cash caddies and Beer mat holders to suit your requirements. Vacuum form, Injection moulded or Fabricated and branded in your corporate colours.

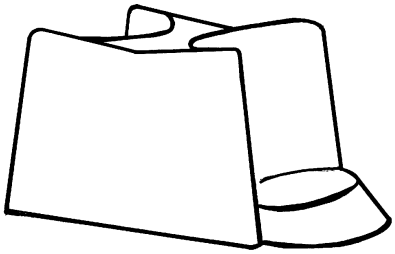

Beer Mat Holder

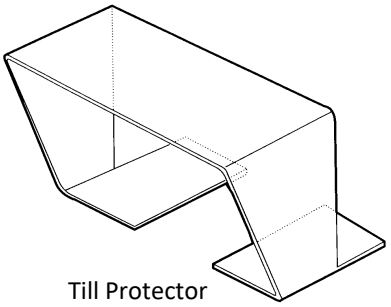

Till Protector

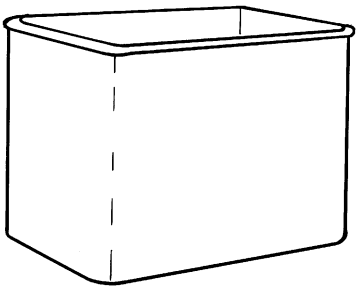

Ice Bucket

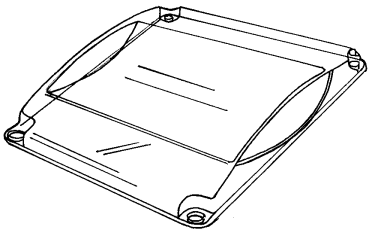

Cash Caddie

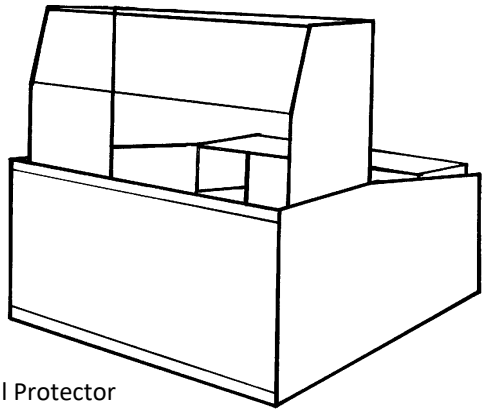

Till Protector

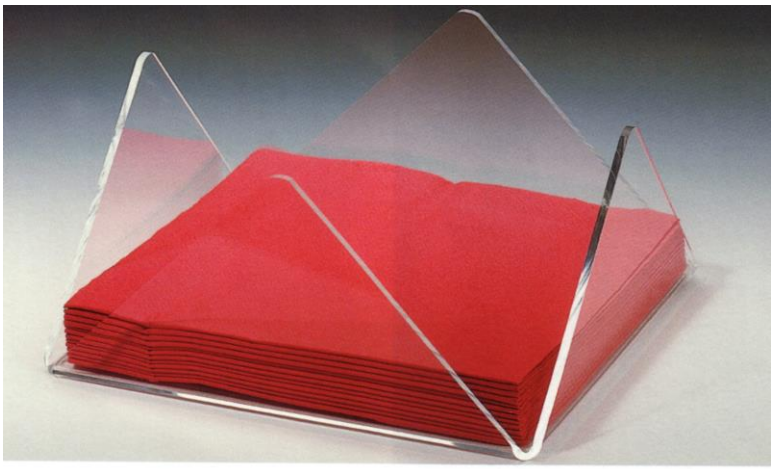

Napkin Holder

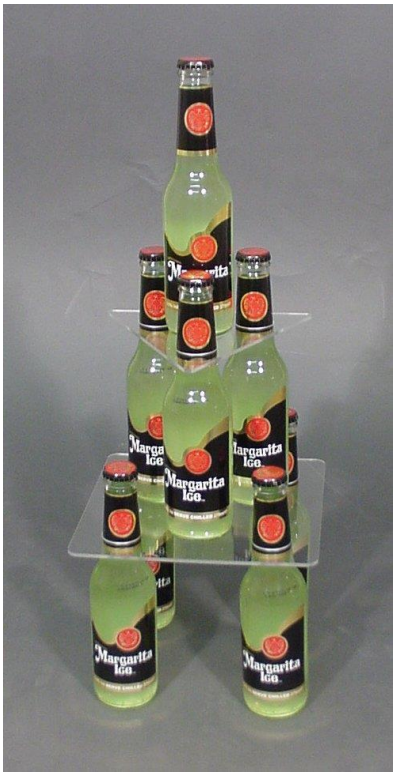

Drink Display

ACRYLIC DESIGN
& Fabrication Company Limited.
Unit 5a Dunboyne Industrial Estate,
Dunboyne, County Meath.
telephone: 01-802 6480 fax: 01-802 6481
email: sales@acrylicdesign.ie
www.acrylicdesign.ie

Delph Displays

Slotted Plate Display

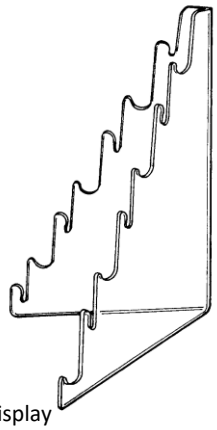

Knife Display
Unit size (mm) 290H 176W 195D

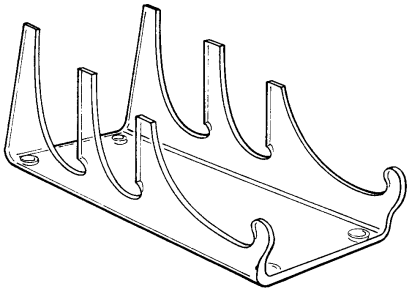

Three Piece Place setting display
This unit can be made in different sizes.
Unit size (mm) 82H 90W 222D

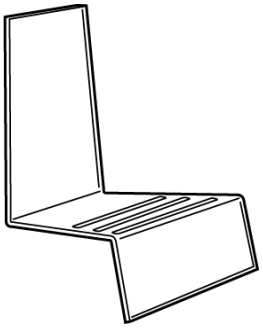

3 Slot Plate Stand in clear acrylic.
Unit size (mm) 178H 90W 127D.

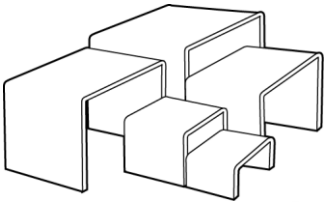

Display Bridges
Made in 3mm clear acrylic
Various sizes available

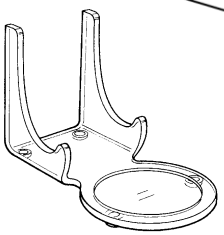

Cup and Saucer Display
Unit size (mm) 82H 75W 130D

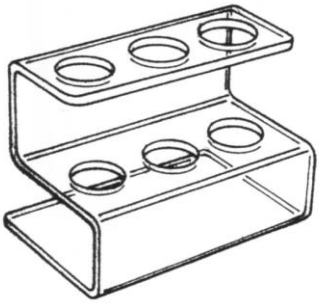

Silver Wear Display

Cup and Saucer Display

Various Plate Displays

ACRYLIC DESIGN
& Fabrication Company Limited.
Unit 5a Dunboyne Industrial Estate,
Dunboyne, County Meath.
telephone: 01-802 6480 fax: 01-802 6481
email: sales@acrylicdesign.ie
www.acrylicdesign.ie

Adjustable Display Shelves

These adjustable shelves for slat wall hold a variety of merchandise, linen, books, picture frames and many more.
Position the left and right sides to suit your products.

Inside shelf depth is 9 ½ inches.

ACRYLIC DESIGN
& Fabrication Company Limited.
Unit 5a Dunboyne Industrial Estate,
Dunboyne, County Meath.
telephone: 01-802 6480 fax: 01-802 6481
email: sales@acrylicdesign.ie
www.acrylicdesign.ie